■ ACT-Column to AU Girder Connection Detail

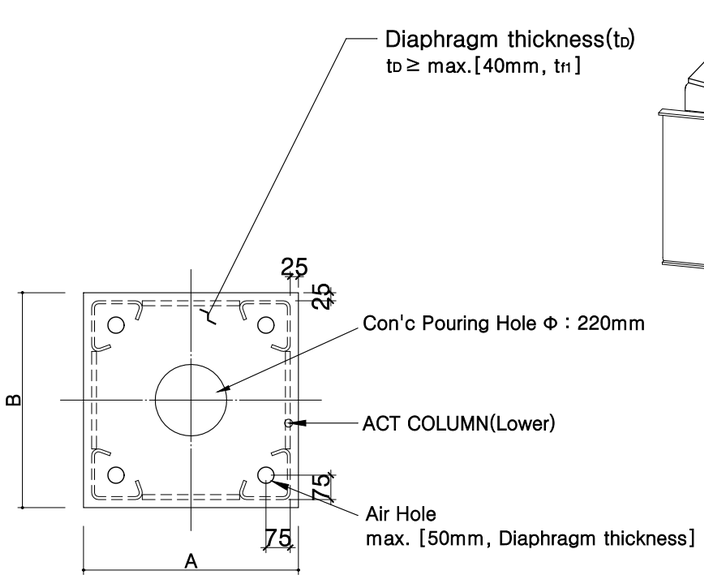

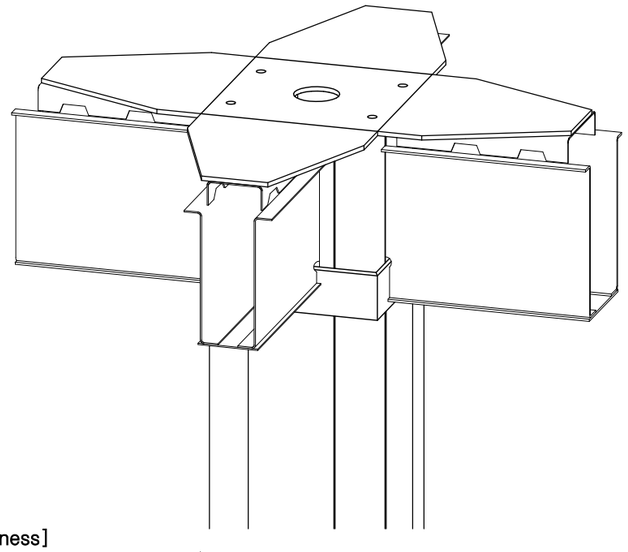

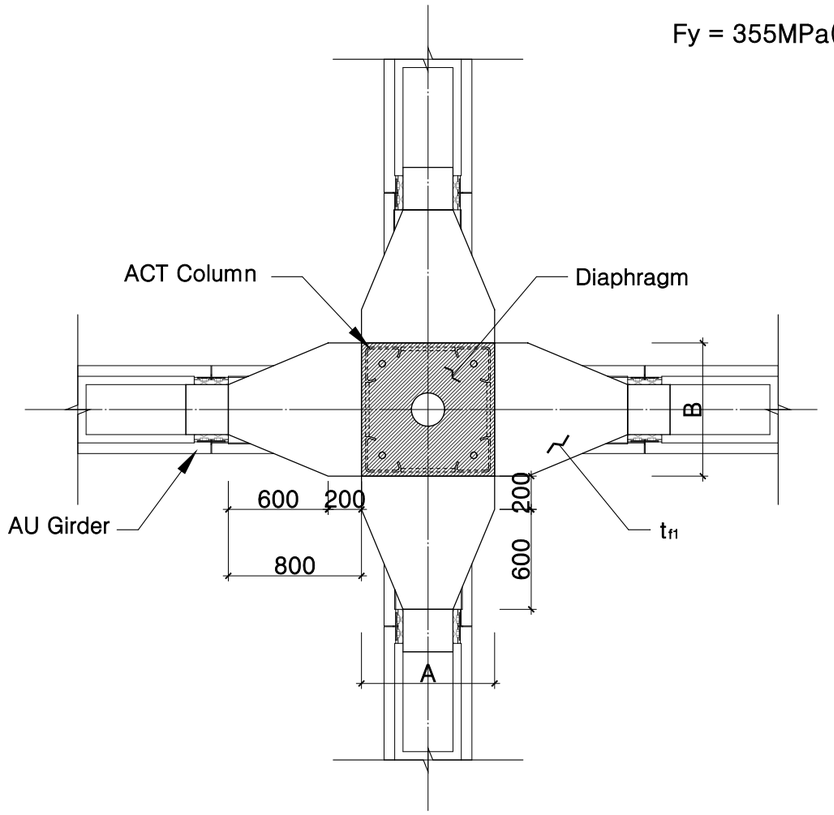

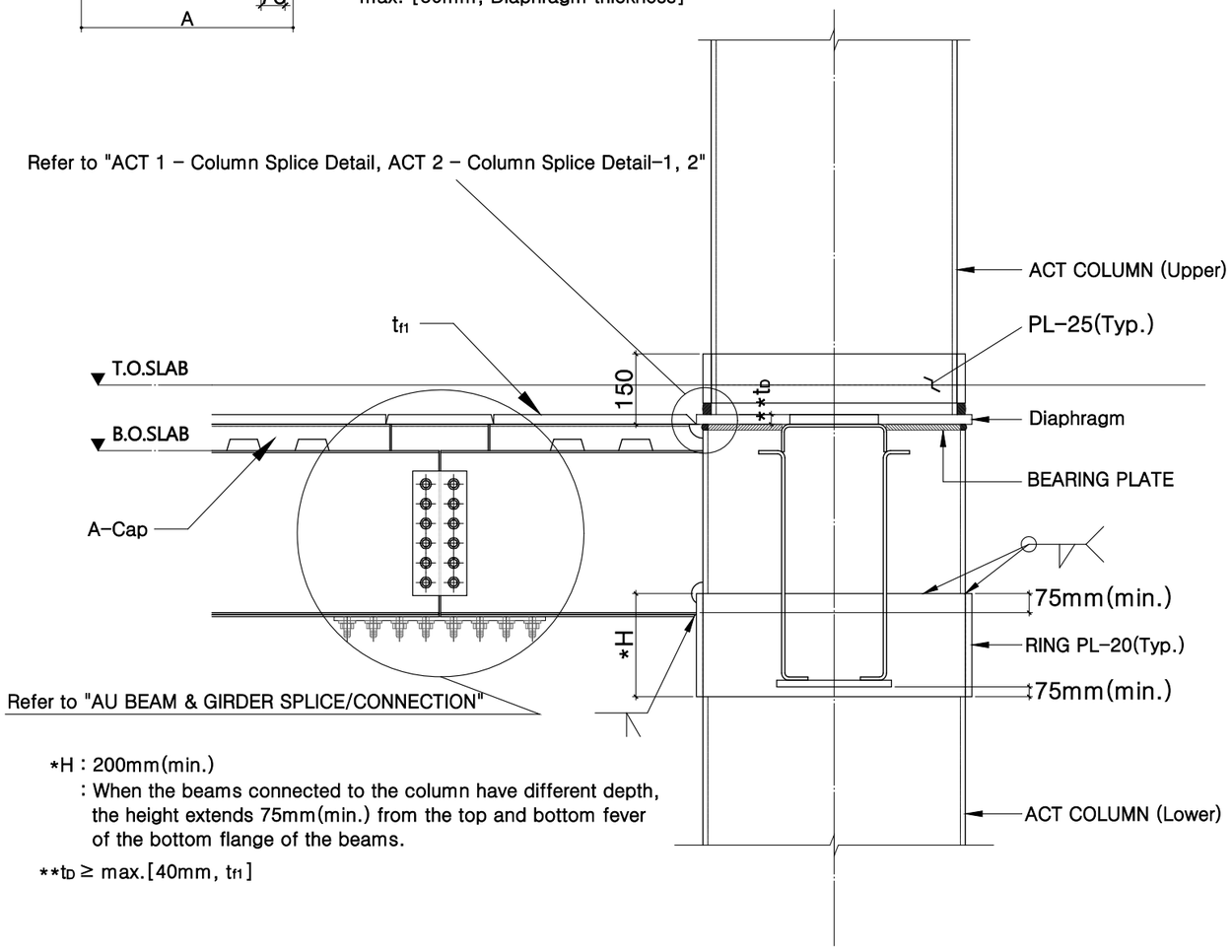

*H : 200mm(min.)
: When the beams connected to the column have different depth, the height extends 75mm(min.) from the top and bottom fever of the bottom flange of the beams.
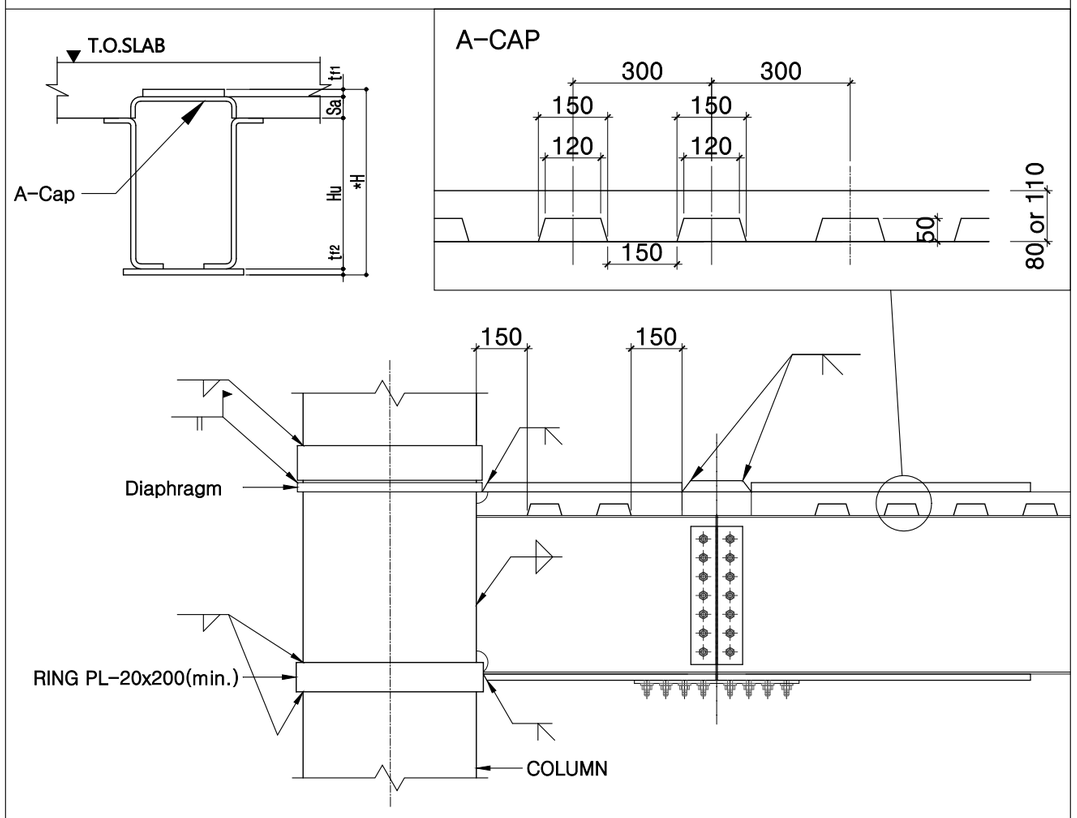
**$t_D \geq$ max.[40mm, t_{f1}]